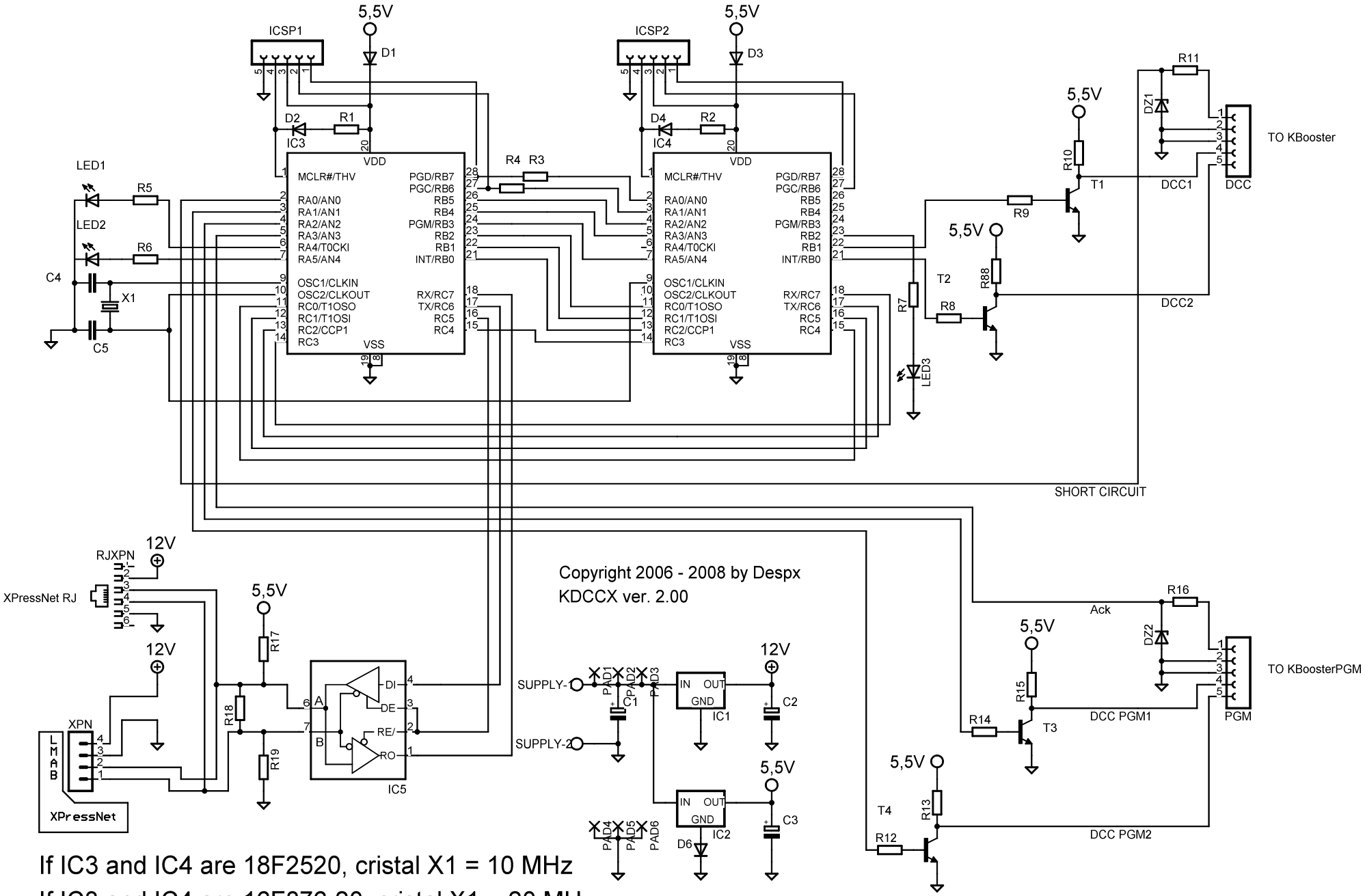

If IC3 and IC4 are 18F2520, cristal X1 = 10 MHz

If IC3 and IC4 are 16F876-20, cristal X1 = 20 MHz

Attention to the position of RJ's contacts chosen (high or low)